Heat Exchanger Specification Sheet

1	Company: Leucrotta Exploration Inc.						
2	Location: Doe Creek Sour Gas Plant						
3	Service of Unit: Gas Liquids Exchanger	Our Reference: Q14-0262 Rev 5					
4	Item No.: E-301ó	Your Reference:					
5	Date: December 5, 2014	Rev No.:	Job No.: J145165				
6	Size 9--480 in	Type NEN Hor	Connected in 1 parallel 2 series				
7	Surf/unit(eff.) 1123.6 ft²	Shells/unit 2	Surf/shell (eff.) 561.8 ft²				
8	**PERFORMANCE OF ONE UNIT**						
9	Fluid allocation		Shell Side		Tube Side		
10	Fluid name		DeC2 Feed		Inlet Gas		
11	Fluid quantity, Total	lb/h	18181		14699		
12	Vapor (In/Out)	lb/h	0	2677	14463	13313	
13	Liquid	lb/h	18181	15504	236	1386	
14	Noncondensable	lb/h	0	0	0	0	
15							
16	Temperature (In/Out)	°F	2	60.32	103.93	22.72	
17	Dew / Bubble point	°F	396.08	2	1254.14	-177.23	
18	Density Vapor/Liquid	lb/ft³	/ 29.265	4.56 / 28.593	3.5 / 68.055	4.468 / 33.694	
19	Viscosity	cp	/ 0.1003	0.0132 / 0.0913	0.0135 / 4.3043	0.0126 / 0.1483	
20	Molecular wt, Vap			21.66	20.13	19.34	
21	Molecular wt, NC						
22	Specific heat	BTU/(lb F)	/ 0.6497	0.6888 / 0.6777	0.6261 / 0.6785	0.7201 / 0.6341	
23	Thermal conductivity	BTU/(ft h F)	/ 0.054	0.021 / 0.05	0.022 / 0.176	0.02 / 0.058	
24	Latent heat	BTU/lb	71.9	68.8	939.8	82.4	
25	Pressure (abs)	psi	868.6	866.3	878.6	875.83	
26	Velocity	ft/s	3.41		8.58		
27	Pressure drop, allow./calc.	psi	15	2.3	15	2.77	
28	Fouling resist. (min)	ft² h F/BTU	0.002		0.002	0.0026 Ao based	
29	Heat exchanged 892345	BTU/h	MTD corrected 27.73 °F				
30	Transfer rate, Service 28.64	Dirty 47.48	Clean 60.62	BTU/(h ft² F)			
31	**CONSTRUCTION OF ONE SHELL**				**Sketch**		
32			Shell Side	Tube Side			
33	Design/vac/test pressure:g	psi	1300/ /	1300/ /			
34	Design temperature	°F	150	150			
35	Number passes per shell		1	1			
36	Corrosion allowance	in	0.0625	0.0625			
37	Connections In	in	1 3/600 ANSI	1 4/600 ANSI			
38	Size/rating Out		1 3/600 ANSI	1 4/600 ANSI			
39	Nominal Intermediate		1 3/600 ANSI	1 4/600 ANSI			
40	Tube No. 72 OD 0.75	Tks-Avg 0.083 in	Length 480 in	Pitch 0.9375 in			
41	Tube type Plain	#/in	Material SA-179 K01200	Tube pattern 30			
42	Shell SA-333 6	ID 9.75 OD 10.75 in	Shell cover -				
43	Channel or bonnet SA-333 6		Channel cover SA-333 6				
44	Tubesheet-stationary SA-516 70	-	Tubesheet-floating -				
45	Floating head cover -		Impingement protection None				
46	Baffle-crossing SA-36 K02600	Type Single segmental	Cut(%d) 33.35 V	Spacing: c/c 8.15 in			
47	Baffle-long -	Seal type	Inlet 10 in				
48	Supports-tube	U-bend	Type				
49	Bypass seal	Tube-tubesheet joint	Exp.				
50	Expansion joint -	Type None					
51	RhoV2-Inlet nozzle 331	Bundle entrance 20	Bundle exit 37	lb/(ft s²)			
52	Gaskets - Shell side Flat Metal Jacket Fibe	Tube Side	Flat Metal Jacket Fibe				
53	Floating head -						
54	Code requirements ASME Code Sec VIII Div 1		TEMA class C - general service				
55	Weight/Shell 5007.3	Filled with water 6119.2	Bundle 1940.2 lb				
56	Remarks Inlet Pressure - 850 psig - LTS 2 F, DeC2 - 250 psig						
57							
58							

THE DESIGN IT COVERS ARE CONFIDENTIAL AND THE PROPERTY OF PROPAK SYSTEMS LTD., AND SHALL NOT BE DISCLOSED TO OTHERS OR REPRODUCED IN ANY MANNER OR USED FOR ANY PURPOSE WHATSOEVER EXCEPT BY WRITTEN CONSENT OF PROPAK.

NOZZLE SCHEDULE

	MK	SIZE	RATING	FACING	SCH	SERVICE	EXT. PROJ	WELD
	N1	4 NPS	600#	RFWN	XXH	TUBESIDE INLET (TOP BARREL)	250	–
	N2	4 NPS	600#	RFWN	XXH	TUBESIDE OUTLET (BTM BARREL)	SPEC.	–
	N3	3 NPS	600#	RFWN	XXH	SHELLSIDE INLET (BTM BARREL)	250	–
	N4	3 NPS	600#	RFWN	XXH	SHELLSIDE OUTLET (TOP BARREL)	250	–
A/B	R1	4 NPS	–	PIPE	XXH	TUBESIDE RISER	SPEC.	–
A/B	R2	3 NPS	–	PIPE	XXH	SHELLSIDE RISER	SPEC.	–
A/B	C1	3/4 NPS	3000#	CPLG	XL	VENT w/ PLUG	–	–
A/B	C2	3/4 NPS	3000#	CPLG	XL	DRAIN w/ PLUG	–	–
A/B	C3	1 NPS	3000#	CPLG	–	GLYCOL INJ. w/SPRAY NOZZLE	–	–

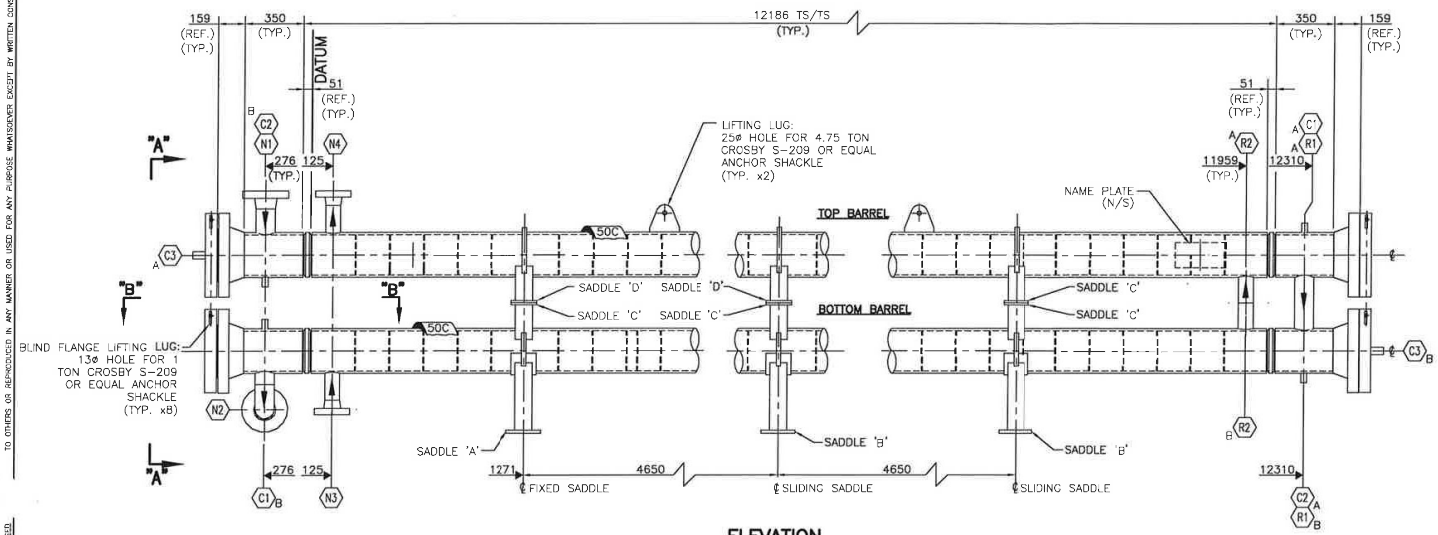

ELEVATION
SCALE 1:15

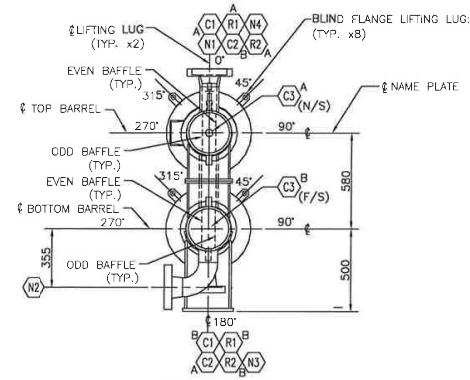

VIEW 'A-A'
SCALE 1:15

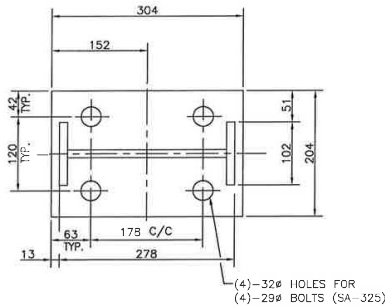

SADDLE"A"

BOTTOM FIXED BASEPLATE DETAIL
(1) REQ'D
SCALE 1:4

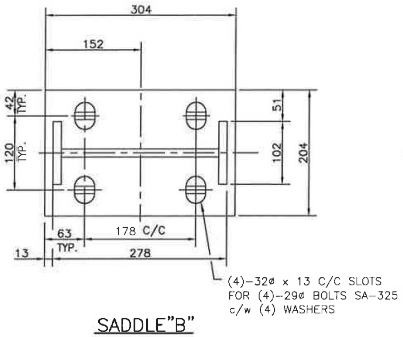

SADDLE"B"

BOTTOM SLIDING BASEPLATE DETAIL
(2) REQ'D
SCALE 1:4

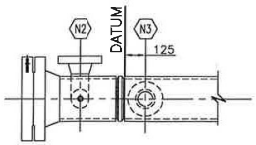

VIEW 'B-B'
SCALE 1:15

SERVICE: SS: LTS LIQUIDS
TS: INLET GAS/GLYCOL

LOADINGS PER UG-22(e) CONSIDERED
GOVERNS: NO

PRODUCTION IMPACT TEST REQ'D:
NO-PER UCS-67(a)(3)

IMPACT TESTING:
VESSEL:
NO-PER UCS-66(a) & FIG. UCS-66
-LOW TEMP. MAT'L PER UCS-66(g)
TUBESHEETS:
NO-PER UCS-66(a)(1)(c) & FIG. UCS-66

CAPACITY: 1.25 m^3

SURFACE AREA OF TUBES: 52.03 m^2 (EACH BARREL)

WEIGHT EMPTY (INCL. BUNDLE):
TOP BARREL: 2745 kg
BOTTOM BARREL: 2745 kg
TOTAL WEIGHT: 6740 kg

APPROX. TUBE BUNDLE WEIGHT: 742 kg (EACH BARREL)

PAINT SPEC: PNT-11

INSULATION: 50C THK FOAMGLASS
C/W ALUMINUM JACKET

SHIP LOOSE: YES

SERIAL NO: 145165-111-04 **CRN:** W5972.2
YEAR BUILT: 2015
LSD #: 13-24-80-15 W6M
CODE:
ASME SECT. VIII DIV I,'13, ADDENDA –

	SHELLSIDE	TUBESIDE
DESIGN PRESSURE	8962 kPag	8962 kPag
	NOTE: DES. PRESS. IS MAWP	
DESIGN TEMP.	66°C	66°C
M.D.M.T.	-45°C @ 8962 kPag	-45°C @ 8962 kPag
HYDRO. PRESSURE	11652 kPag	11652 kPag
MATERIAL: HEAD:	SA-516-70N	SA-516-70N/SA-350-LF2,CL1
MATERIAL: SHELL:	SA-333-GR6 SMLS	SA-333-GR6 SMLS
RADIOGRAPHY: LONG	–	–
RADIOGRAPHY: CIRC.	SPOT UW-11(a)5(b)12(d)	SPOT UW-11(a)5(b)12(d)
P.W.H.T.	NO	NO
MIN TEMP / TIME	–	–
CORR. ALLOWANCE	1.59mm	1.59mm

TAG NO: **E-3010**

GENERAL NOTES	GENERAL NOTES	SKT	ISSUED FOR DOCUMENTATION	EMP	15/05/25	VAK	JLT
		No.	REVISION	BY	DATE	CKD	ENG

THIS DRAWING AND

DATE: 2015/04/27 04:23 PM J:\JOBS14\145165\20-DRAWINGS\FAB\MISC\SKT\EXC-145165-111-04-SKT-01(E-3010).DWG npeng

APPROVED		DRAWN	
MECH./STRUCT.		BY	
DATE		DATE	
ELECTRICAL		CHECKED	
DATE		BY	
PROJECT		DATE	
DATE			
		SCALE	AS NOTED

LEUCROTTA EXPLORATION INC.

DOE CREEK SOUR GAS PLANT
GAS/LIQUID EXCHANGER (E-3010)
273 O/D x 12186 TS/TS

DWG. No.: D-EXC-145165-111-04-SKT SHT 1 OF 1 REV. SKT

PROPAK
440 East Lake Road,
Airdrie, Alberta
Canada T4A 2J8

THIS DESIGN IT COVERS ARE CONFIDENTIAL AND THE PROPERTY OF PROPAK SYSTEMS LTD. AND SHALL NOT BE DISCLOSED TO OTHERS OR REPRODUCED IN ANY MANNER OR USED FOR ANY PURPOSE WHATSOEVER EXCEPT BY WRITTEN CONSENT OF PROPAK

BILL OF MATERIAL

ITEM	QUA	PART NO.	DESCRIPTION	
51	6	327005	PLATE: 1" THK. x 13 1/4" O/D x 10 7/8" I/D (CTS)	SA-36
52	3		PLATE: 3/8" THK. x 5" x 15 1/8" LG [ROLL LONG WAY TO 10 3/4" I/D]	SA-516-70N
53	3	327002	PLATE: 1/2" THK. x 9 15/16" x 15 15/16" LG. (CTS)	SA-36
54	6	327002	PLATE: 1/2" THK. x 4" x 15-15/16" LG.	SA-36
55	6	327001	PLATE: 3/8" THK. x 9 1/4" x 8 1/8" LG. (CTS)	SA-36
56	12	327001	PLATE: 3/8" THK. x 4" x 8 1/8" LG. (CTS)	SA-36
57	3	327004	PLATE: 3/4" THK. x 8 1/16" x 11 15/16" LG.	SA-36
58	6	327002	PLATE: 1/2" THK. x 6" x 11 1/8" LG.	SA-36
59	8	327001	PLATE: 3/8" THK. x 2" O/D x 1 1/4" I/D	SA-36
60	8	327001	PLATE: 3/8" THK. x 2" O/D x 7/8" I/D	SA-36
61	2	327018	PLATE: 7/8" THK. x 6 1/2" x 7" LG. (CTS)	SA-36
62	8	200185	BOLTS: 3/4"ø x 2 1/2" (64) LG c/w NUT	SA-325
63	8	370050	FLAT BAR : 1/2" THK. x 2" x 3" LG. (CTS)	SA-36

S.L.

TAG #: E-3010

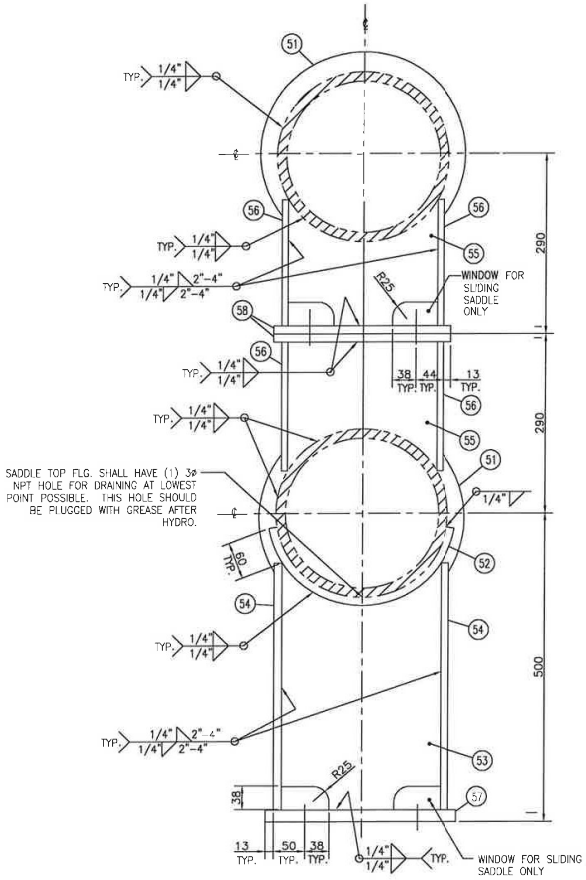

SADDLE ELEVATION
SCALE 1:4

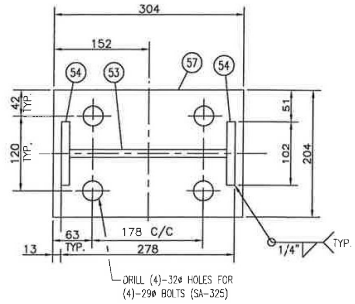

SADDLE"A"

BOTTOM FIXED BASEPLATE DETAIL
(1) REQ'D
SCALE 1:4

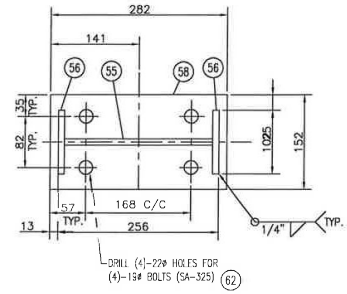

SADDLE"C"

TOP FIXED BASEPLATE DETAIL
(4) REQ'D
SCALE 1:4

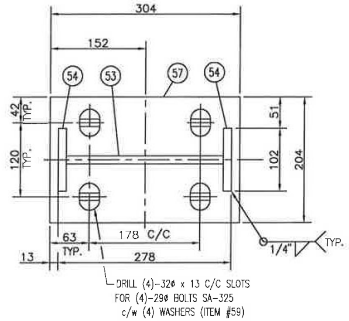

SADDLE"B"

BOTTOM SLIDING BASEPLATE DETAIL
(2) REQ'D
SCALE 1:4

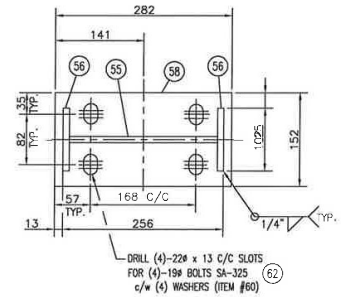

SADDLE"D"

TOP SLIDING BASEPLATE DETAIL
(2) REQ'D
SCALE 1:4

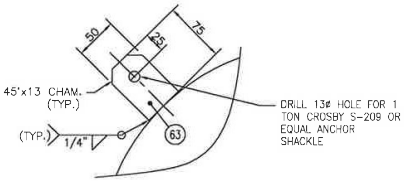

BLIND FLG. LIFTING LUG
(8) REQ'D
SCALE 1:3

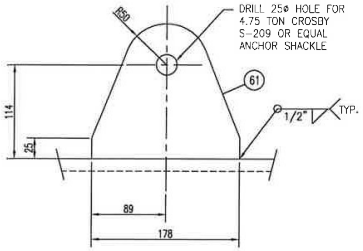

LIFTING LUG
(2) REQ'D
SCALE 1:3

GENERAL NOTES	GENERAL NOTES	No.	DESCRIPTION / REVISION	BY	DATE	CKD	ENG
		1	ISSUED FOR CONSTRUCTION	KUSUM	2015/02/19	H.JI	D.W.

REV	N/A	BY	CKD
CALCULATION CHECKS			

APPROVED		DRAWN	
MECH./STRUCT.	M.JIN	BY	KUSUM
DATE	2015/02/18	DATE	2015/01/07
ELECTRICAL		CHECKED	
DATE		BY	HONGBO JI
PROJECT	D.MICKRAMSINGHE	DATE	2015/02/10
DATE	2015/02/18		
		SCALE	AS NOTED

LEUCROTTA EXPLORATION INC.

DOE CREEK SOUR GAS PLANT
GAS/LIQUID EXCHANGER
DETAILS

DWG. No.: D-EXC-145165-111-04 SHT. 2 OF 2 REV. 1

PROPAK
440 East Lake Road,
Airdrie, Alberta
Canada T4A 2J8

DATE: 2015/02/19 01:50 PM J:\JOBS14\145165\20-DRAWINGS\FAB\VSL\EXC-145165-111-04 (E-3010).DWG kgyawali